DWG. NO. SD-51004-**00

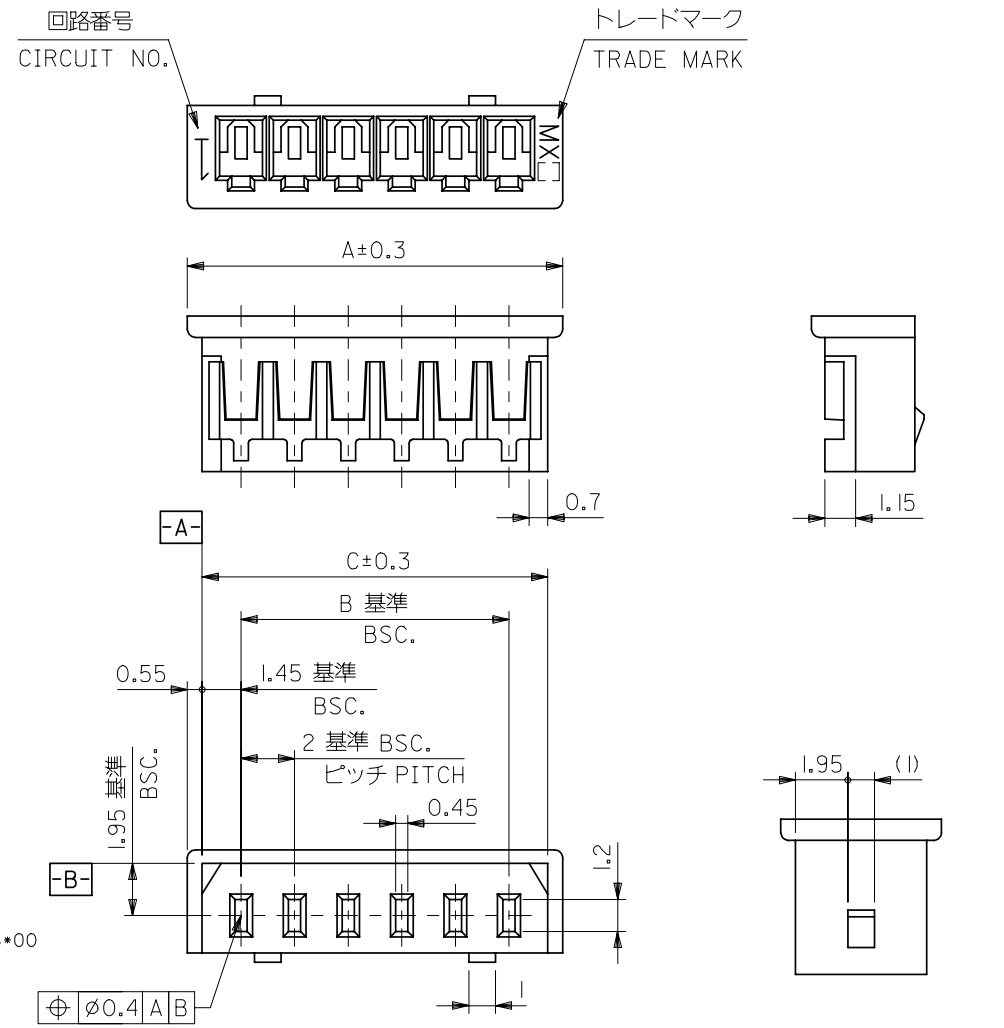


2極の場合
IN CASE OF 2 CIRCUIT HSG.

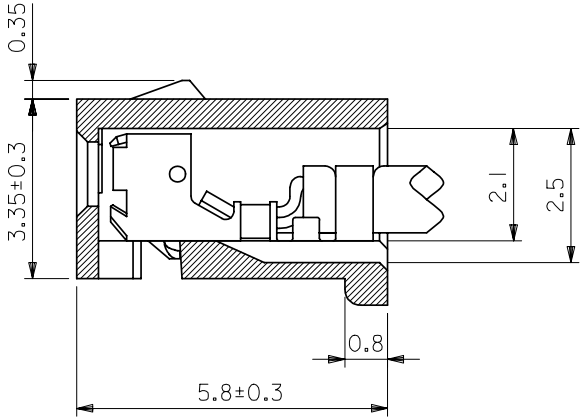


ターミナル装着状態
TERMINAL ASSEMBLY DRAWING
(10:1)

注)
NOTE.
1. 適合ターミナル：50011-8*00
ACCEPTS TERMINAL
2. 嵌合相手：53014-**10
MATES WITH 53015-**10
53025-**10

| A | C | B | ENG.NO. | 極数 CIRCUIT |
|---|---|---|---|---|
| 32 | 30.9 | 28 | 51004-1500 | 15 |
| 30 | 28.9 | 26 | -1400 | 14 |
| 28 | 26.9 | 24 | -1300 | 13 |
| 26 | 24.9 | 22 | -1200 | 12 |
| 24 | 22.9 | 20 | -1100 | 11 |
| 22 | 20.9 | 18 | -1000 | 10 |
| 20 | 18.9 | 16 | -0900 | 9 |
| 18 | 16.9 | 14 | -0800 | 8 |
| 16 | 14.9 | 12 | -0700 | 7 |
| 14 | 12.9 | 10 | -0600 | 6 |
| 12 | 10.9 | 8 | -0500 | 5 |
| 10 | 8.9 | 6 | -0400 | 4 |
| 8 | 6.9 | 4 | -0300 | 3 |
| 6 | 4.9 | 2 | 51004-0200 | 2 |

| | | | | |
|---|---|---|---|---|
| EC NO. DRWN: CH'K: APPR: | EC NO. DRWN: CH'K: APPR: | EC NO. DRWN: CH'K: APPR: | EC NO. DRWN: CH'K: APPR: | REDRAWN EC NO. JC2000-0629 DRWN: K.KOHAMA '00/ 3/28 CH'K: T.YAMAGUCHI '00/ 3/30 APPR: M.FUKUSHIMA '00/ 3/30 |

DESCRIPTION / REV

MATERIAL 材料: PBT. UL94V-0 POLYESTER UL94V-0

FINISH 仕上げ: —//—

WIRE RANGE 適用電線範囲: —//—

INS. RANGE 被覆外径: —//—

GENERAL TOLERANCES: (UNLESS SPECIFIED) 一般公差

| | |
|---|---|
| 10 UNDER 未満 | ±0.2 |
| 10 OVER 以上 30 UNDER 未満 | ±0.25 |
| 30 OVER 以上 | ±0.3 |
| ANGLE 角度 | ±3° |

SCALE 5:1 | DESIGN UNITS ☒mm ☐INCH | THIRD ANGLE PROJECTION | DIMENSIONS: ☐mm/INCH ☐INCH/mm ☒mm ONLY | SHT | REV | REVISE ON CAD ONLY

DRAWN BY & DATE K.KOHAMA '00/ 3/28
CHECKED BY & DATE T.YAMAGUCHI '00/ 3/30
APPROVED BY & DATE M.FUKUSHIMA '00/ 3/30

TITLE: 2.0 LOW-PRO REC. HSG.

molex MOLEX INCORPORATED

CAD FILENAME S51004.S01 | MATERIAL NO. 51004-**00 | DRAWING NO. SD-51004-**00 | SHEET NO. 1

THIS DRAWING CONTAINS INFORMATION THAT IS PROPRIETARY TO MOLEX INCORPORATED AND SHOULD NOT BE USED WITHOUT WRITTEN PERMISSION.

SIZE B

DO NOT SCALE DRAWING

S51004.S01

EN-02J(097) MXJ-54