THIS DRAWING IS THE PROPERTY OF FAIRCHILD SEMICONDUCTOR CORPORATION. NO USE THEREOF SHALL BE MADE OTHER THAN AS A REFERENCE FOR PROPOSALS AS SUBMITTED TO FAIRCHILD SEMICONDUCTOR CORPORATION FOR JOBS TO BE EXECUTED IN CONFORMITY WITH SUCH PROPOSALS UNLESS THE CONSENT OF SAID FAIRCHILD SEMICONDUCTOR CORPORATION HAS PREVIOUSLY BEEN OBTAINED. NO PART OF THIS DRAWING SHALL BE COPIED OR DUPLICATED OR ITS CONTENTS DISCLOSED. THE INFORMATION CONTAINED ON THIS DRAWING IS CONFIDENTIAL AND PROPRIETARY.

REVISIONS

NBR	DESCRIPTION	DATE	BY/APP'D
1	RELEASED TO DCC	04JUN08	SDLEE/ SUZHOU

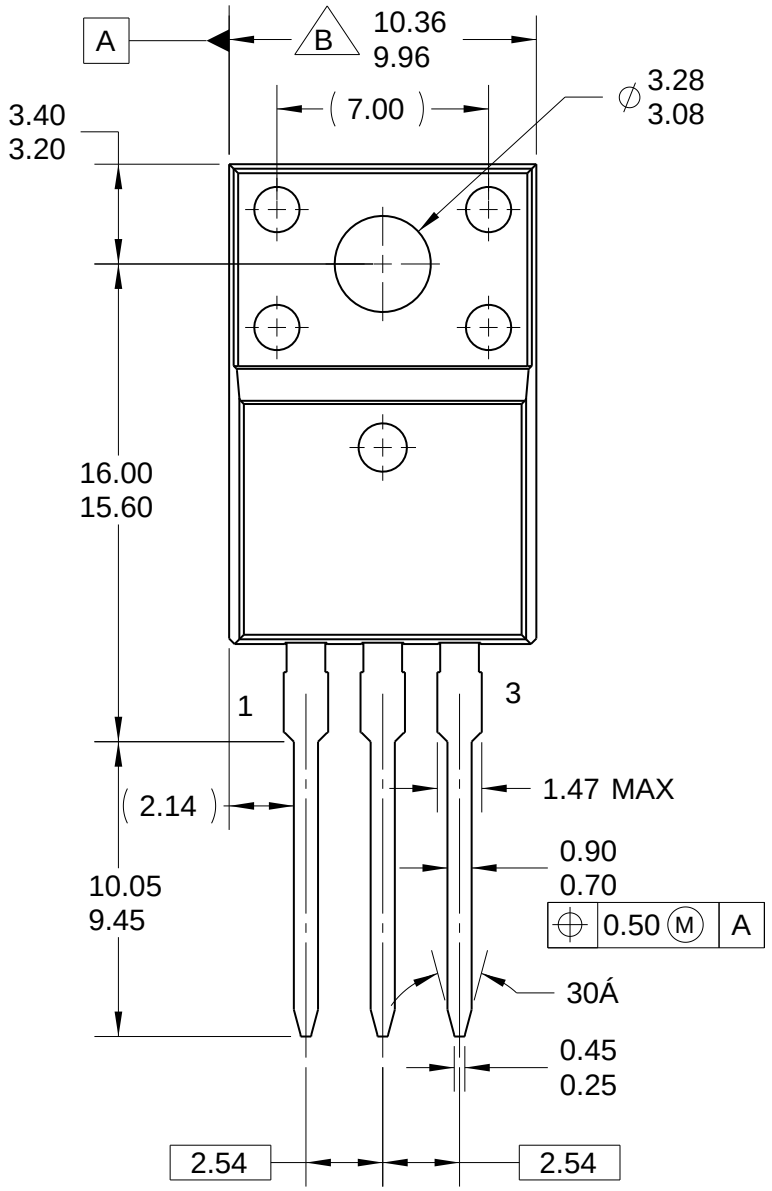

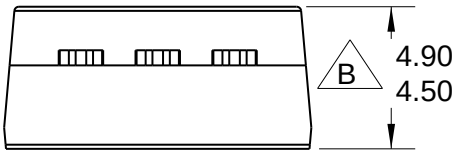

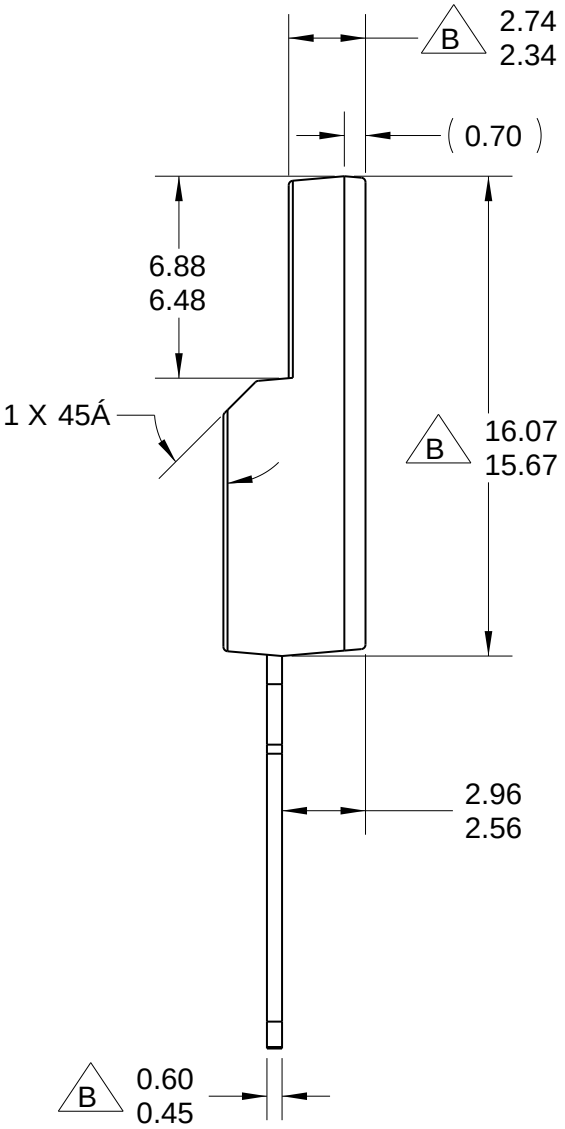

NOTES:

A. EXCEPT WHERE NOTED CONFORMS TO EIAJ SC91A.
B. DOES NOT COMPLY EIAJ STD. VALUE.
C. ALL DIMENSIONS ARE IN MILLIMETERS.
D. DIMENSIONS ARE EXCLUSIVE OF BURRS, MOLD FLASH AND TIE BAR PROTRUSIONS.
E. DIMENSION AND TOLERANCE AS PER ASME Y14.5-1994.
F. DRAWING FILE NAME: TO220M03REV1

APPROVALS	DATE
DRAWN: BOBOY MALDO	04JUN08
CHECKED: SD LEE	
APPROVED: BY HUANG	
APPROVED: HOWARD ALLEN	

PROJECTION [MM] INCH

FAIRCHILD SEMICONDUCTOR™

TO220, MOLDED, 3LD, FULL PACK
EIAJ SC91, STRAIGHT LEAD

SCALE	SIZE	DRAWING NUMBER	REV
1:1	N/A	MKT-TO220M03	1

FORMERLY: N/A

SHEET : 1 OF 1